Product data sheet

Specifications

body for BCD encoded output switch - 1 pole - 45° - 12 A - screw mounting

K1A001BL

Discontinued on: Jan 29, 2021

Discontinued

Main

Range Of Product	Harmony K
Product Or Component Type	Cam switch body
Component Name	K1
[Ith] Conventional Free Air Thermal Current	12 A
Sub-Assembly Composition	Contact blocks + fixing plate
Cam Switch Function	BCD encoded output switch
Off Position	With Off position
Switching Positions	Right: 0° - 45°
Mounting Location	Front
Fixing Mode	Multifixing
Bezel Material	Plastic

Complementary

Number Of Decimal	1
Switching Angle	45 °
[Ui] Rated Insulation Voltage	690 V (pollution degree 3) conforming to IEC 60947-1
[Ithe] Conventional Enclosed Thermal Current	10 A
Rated Operational Power In W	10500 W AC-21, 500 - 660 V 3 phases conforming to IEC 947-3 1100 W AC-3, 230 V 3 phases conforming to IEC 947-3 1500 W AC-23A, 230 V 3 phases conforming to IEC 947-3 1500 W AC-3, 400 V 1 phase conforming to IEC 947-3 1500 W AC-3, 400 V 3 phases conforming to IEC 947-3 1500 W AC-3, 500 V 3 phases conforming to IEC 947-3 1500 W AC-3, 690 V 3 phases conforming to IEC 947-3 2200 W AC-23A, 400 V 3 phases conforming to IEC 947-3 2200 W AC-23A, 500 V 3 phases conforming to IEC 947-3 2200 W AC-23A, 690 V 3 phases conforming to IEC 947-3 4800 W AC-21, 230 V 3 phases conforming to IEC 947-3 600 W AC-3, 230 V 1 phase conforming to IEC 947-3 8300 W AC-21, 400 V 3 phases conforming to IEC 947-3
[Ie] Rated Operational Current Ac	1.8 A at 690 V AC-3 3 phases conforming to IEC 947-3 2.8 A at 500 V AC-3 3 phases conforming to IEC 947-3 2.8 A at 690 V AC-23A 3 phases conforming to IEC 947-3 3.3 A at 400 V AC-3 3 phases conforming to IEC 947-3 3.8 A at 500 V AC-23A 3 phases conforming to IEC 947-3 4.6 A at 230 V AC-3 3 phases conforming to IEC 947-3 4.8 A at 400 V AC-23A 3 phases conforming to IEC 947-3 5.6 A at 230 V AC-23A 3 phases conforming to IEC 947-3 1 A at 500 V AC-15 conforming to IEC 947-5-1 2 A at 400 V AC-15 conforming to IEC 947-5-1 3 A at 230 V AC-15 conforming to IEC 947-5-1

Disclaimer: This documentation is not intended as a substitute for and is not to be used for determining suitability or reliability of these products for specific user applications

Electrical Durability	1000000 cycles AC-15 1000000 cycles AC-21 500000 cycles AC-23 500000 cycles AC-3
Maximum Operating Rate	2.5 cyc/mn AC-21 2.5 cyc/mn AC-23 2.5 cyc/mn AC-3 8.333 cyc/mn AC-15
Short-Circuit Current	10000 A
Short-Circuit Protection	16 A cartridge fuse, type gG
[Uimp] Rated Impulse Withstand Voltage	4 kV in isolating function 6 kV conforming to IEC 947-1
Contact Operation	Slow-break
Positive Opening	With
Electrical Connection	Captive screw clamp terminals flexible, clamping capacity: 2 x 1.5 mm² Captive screw clamp terminals solid, clamping capacity: 1 x 2.5 mm²
Mechanical Durability	1000000 cycles
Net Weight	0.101 kg

Environment

Standards	EN 60947-3 for power circuit EN 60947-5-1 for control circuit CENELEC EN 50013
Product Certifications	CSA 240 V 1 hp 1 phase CSA 240 V 3 hp 3 phases 2 -pole(s) UL 240 V 1 hp 3 phases UL 240 V 0.33 hp 1 phase 2 -pole(s)
Protective Treatment	TC
Ambient Air Temperature For Operation	-25…55 °C
Ambient Air Temperature For Storage	-40…70 °C
Shock Resistance	30 gn conforming to IEC 68-2-27
Vibration Resistance	5 gn conforming to IEC 68-2-6 (f = 10…150 Hz)
Overvoltage Category	Class II conforming to IEC 536 Class II conforming to NF C 20-030

Contractual warranty

Warranty	18 months

Dimensions Drawings

Body

Front Mounting “Multi-Fixing”, 2 or 4 Screws

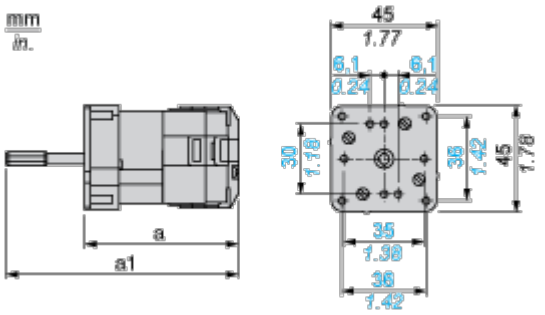

a 53 mm/2.09 in.

a1 77 mm/3.03 in.

Technical Description

Link Positions (Factory Mounted)

Diagram for 1 to 12-decimal BCD Encoded Ouput Switches

Select the maximum number of decimals according to the product characteristics.

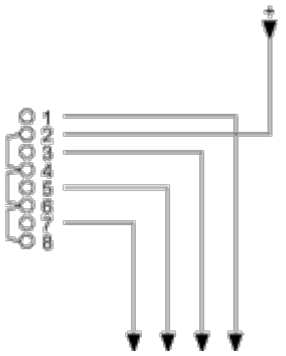

Angular Position of Switch

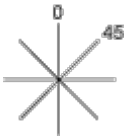

Switching Program

Diagram for 1 to 7-decimal BCD Encoded Ouput Switches

Select the maximum number of decimals according to the product characteristics.

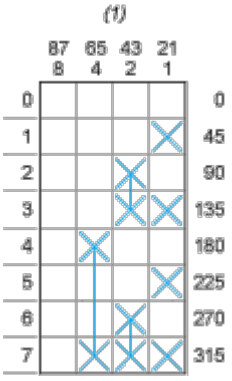

(1) Contact marking value

Convention Used for Switching Program Representation

Contact closed

Contact closed in 2 positions and maintained between the 2 positions

Sealed assembly for auto-maintain control

Overlapping contacts

Spring return position: for a switching angle of 90°, spring return is over 30° after the last position (for a maximum of 3 simultaneous contacts).
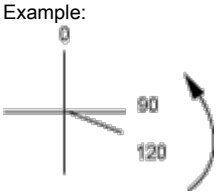
Example: